4ft Full Table Thrown-3 Sides

Artwork Specifications

Print Ready Artwork Requirement:

Artwork to be supplied as a PDF file.
Artwork to be set up as CMYK or Pantone color mode.
All the text must be outlined/ convert to path.
All images and elements must be embed . No trim, crop or registration marks.
Artwork to be supplied at 100% 50% 25% or 10%. The correct proportion is important.
Photographic images should be supplied at 150dpi or better resolution.

Send Artwork:

Email to **sales@flagadvertising.com.cn** if size is less than 20MB.
For large artwork, use free service of www.wetransfer.com/www.hightail.com,
or any other website to upload file and send us the download link.
(with clear reference of your order/invoice number)

Back

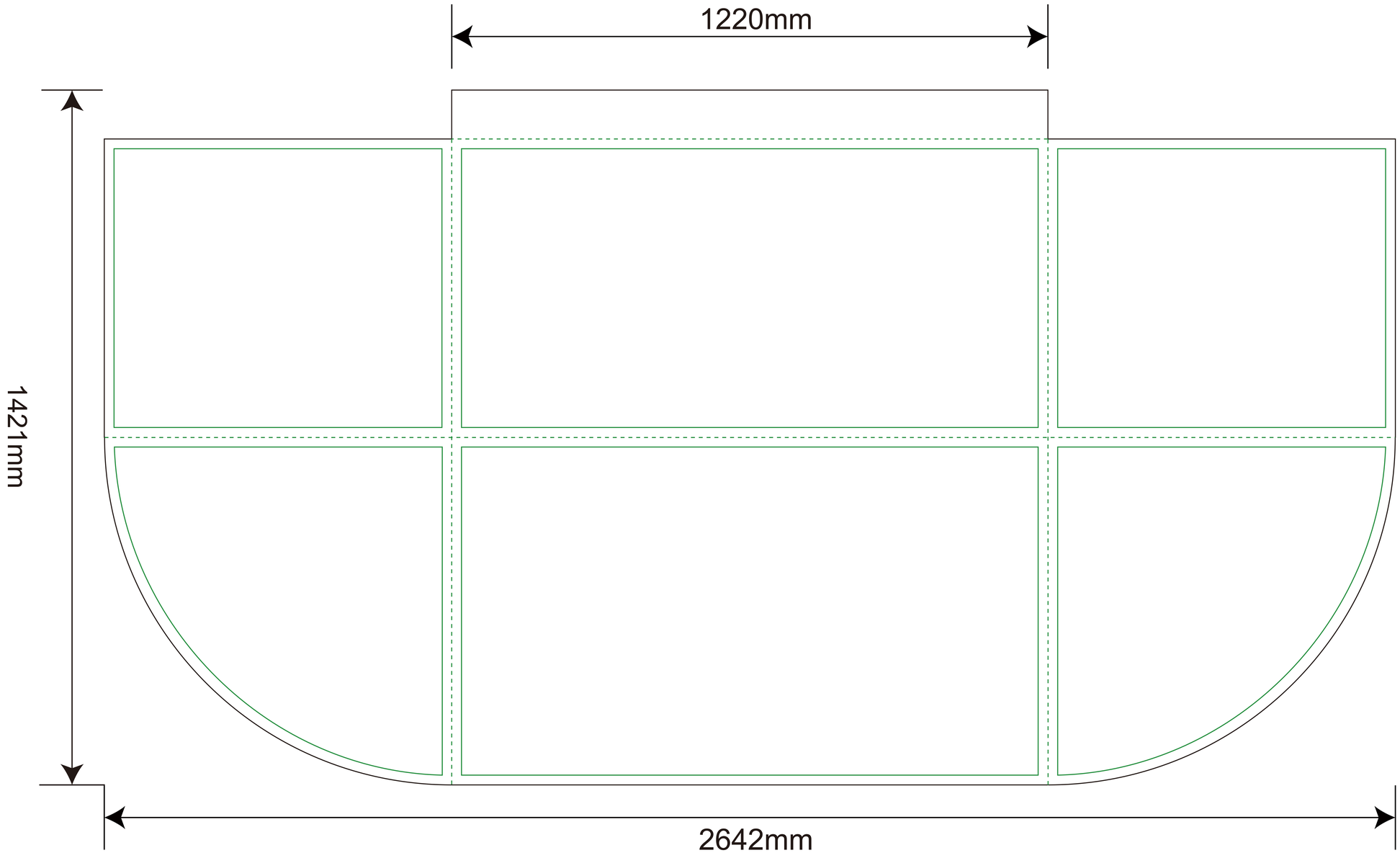
1220mm
1421mm
2642mm